IXYS

ADVANCE TECHNICAL INFORMATION

DSEE15-06CC

HiPerDynFRED™ Epitaxial Diode
ISOPLUS220™
Electrically Isolated Back Surface

I_{FAV} = 15 A
V_{RRM} = 600 V
t_{rr} = 30 ns

V_{RRM} ① V	V_{RRM} V	Type
600	300	DSEE15-06CC

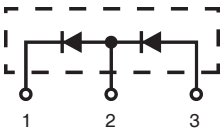

ISOPLUS 220
E153432

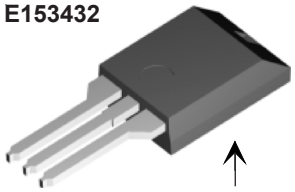

Isolated back surface*

Symbol	Conditions	Maximum Ratings	
I_{FRMS}		35	A
I_{FAVM} ①	T_C = 115°C; rectangular, d = 0.5	15	A
I_{FSM}	T_{VJ} = 45°C; t_p = 10 ms (50 Hz), sine	110	A
E_{AS}	T_{VJ} = 25°C; non-repetitive I_{AS} = 2.5 A; L = 180 µH	0.8	mJ
I_{AR}	$V_A = 1.5 \cdot V_R$ typ.; f = 10 kHz; repetitive	0.2	A
T_{VJ}		-55...+175	°C
T_{VJM}		175	°C
T_{stg}		-55...+150	°C
T_L	1.6 mm (0.063 in) from case for 10 s	260	°C
P_{tot}	T_C = 25°C	95	W
V_{ISOL}	50/60 Hz RMS; $I_{ISOL} \leq$ 1 mA	2500	V~
F_C	Mounting force	11...65 / 2.5...15	N / lb
Weight	typical	2	g

Symbol	Conditions	Characteristic Values typ.	max.	
I_R ②	T_{VJ} = 25°C $V_R = V_{RRM}$		100	µA
	T_{VJ} = 150°C $V_R = V_{RRM}$ ③		0.5	mA
V_F	I_F = 15 A; T_{VJ} = 125°C		1.25	V
	T_{VJ} = 25°C		1.7	V
R_{thJC}			1.6	K/W
R_{thCH}		0.6		K/W
t_{rr}	I_F = 1 A; -di/dt = 200 A/µs; V_R = 30 V	30		ns
I_{RM}	V_R = 100 V; I_F = 25 A; $-di_F/dt$ = 100 A/µs T_{VJ} = 100°C	2	2.7	A

Notes: Data given for T_{VJ} = 25°C and per diode unless otherwise specified
① Diodes connected in series
② Pulse test: pulse Width = 5 ms, Duty Cycle < 2.0 %
③ Pulse test: pulse Width = 300 µs, Duty Cycle < 2.0 %

Features
- Silicon chip on Direct-Copper-Bond substrate
  - High power dissipation
  - Isolated mounting surface
  - 2500V electrical isolation
- Low cathode to tab capacitance (<15pF)
- Planar passivated chips
- Very short recovery time
- Extremely low switching losses
- Low I_{RM}-values
- Soft recovery behaviour
- Epoxy meets UL 94V-0

Applications
- Antiparallel diode for high frequency switching devices
- Antisaturation diode
- Snubber diode
- Free wheeling diode in converters and motor control circuits
- Rectifiers in switch mode power supplies (SMPS)
- Inductive heating
- Uninterruptible power supplies (UPS)
- Ultrasonic cleaners and welders

Advantages
- Avalanche voltage rated for reliable operation
- Soft reverse recovery for low EMI/RFI
- Low I_{RM} reduces:
  - Power dissipation within the diode
  - Turn-on loss in the commutating switch

See DSEP 15-03A data sheet for characteristic curves.

Recommended replacement: DSEE29-06CC

NOT FOR NEW DESIGN

© 2003 IXYS All rights reserved

IXYS reserves the right to change limits, test conditions and dimensions.

ISOPLUS220 Outline

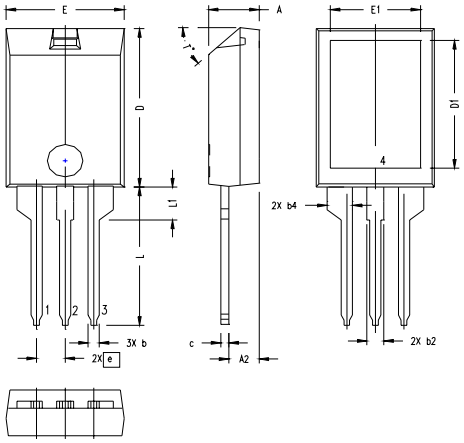

SYM	INCHES		MILLIMETERS	
	MIN	MAX	MIN	MAX
A	.157	.197	4.00	5.00
A2	.098	.118	2.50	3.00
b	.035	.051	0.90	1.30
b2	.049	.065	1.25	1.65
b4	.093	.100	2.35	2.55
c	.028	.039	0.70	1.00
D	.591	.630	15.00	16.00
D1	.472	.512	12.00	13.00
E	.394	.433	10.00	11.00
E1	.295	.335	7.50	8.50
e	.100 BASIC		2.55 BASIC	
L	.512	.571	13.00	14.50
L1	.118	.138	3.00	3.50
T°			42.5°	47.5°

NOTE:

1. Bottom heatsink (Pin 4) is electrically isolated from Pin 1, 2 or 3.
2. Pin connections:
   - 1 - Cathode
   - 2 - Anode/Cathode
   - 3 - Anode

NOT FOR DESIGN